GBC Full Circle Service™

44DT
PARTS LIST

GBC IS AN ACCO BRANDS COMPANY

ITEM NO.	PART NUMBER	PART NAME	QTY
1	630600607	BOTTOM PLATE	1
2	630600608	44DT BOTTOM SPACER	2
3	703010103	RUBBER FOOT	4
4	609070103	CROSS FAN MOTOR	1
5	609070104	CROSS FAN MOTOR	1
6	630600609	PCB PLATE	2
7	610011903	TRANSFORMER GM7660EX-234	1
8	637000002	FUSE HOLDER	2
9	639700003	TRIAC	1

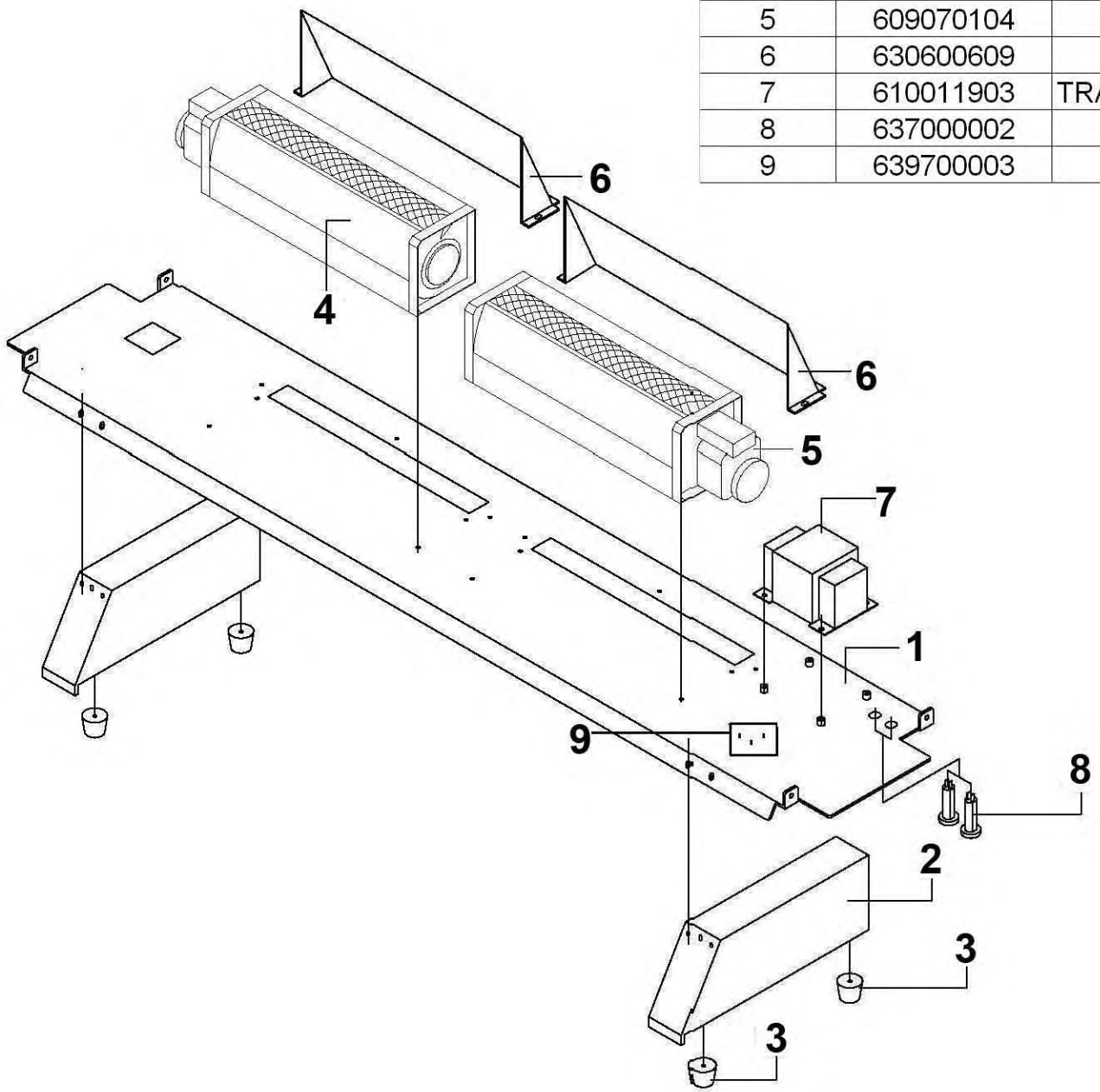

ITEM NO.	PART NUMBER	PART NAME	QTY
1	630600618	44DT SIDE PLATE(L)	1
2	630600619	44DT SIDE PLATE(R)	1
3	632501595	IDLE ROLLER	1
4	613030540	IDLER ROLL SUPPORT PIN	1
5	701050234	DU BUSHING FLANGE	2
6	6090205	DC GEARED MOTOR (DMO12)	1
A-1	630600517	FAN PLATE	1
A-2	630600464	FLOW GUIDE	1

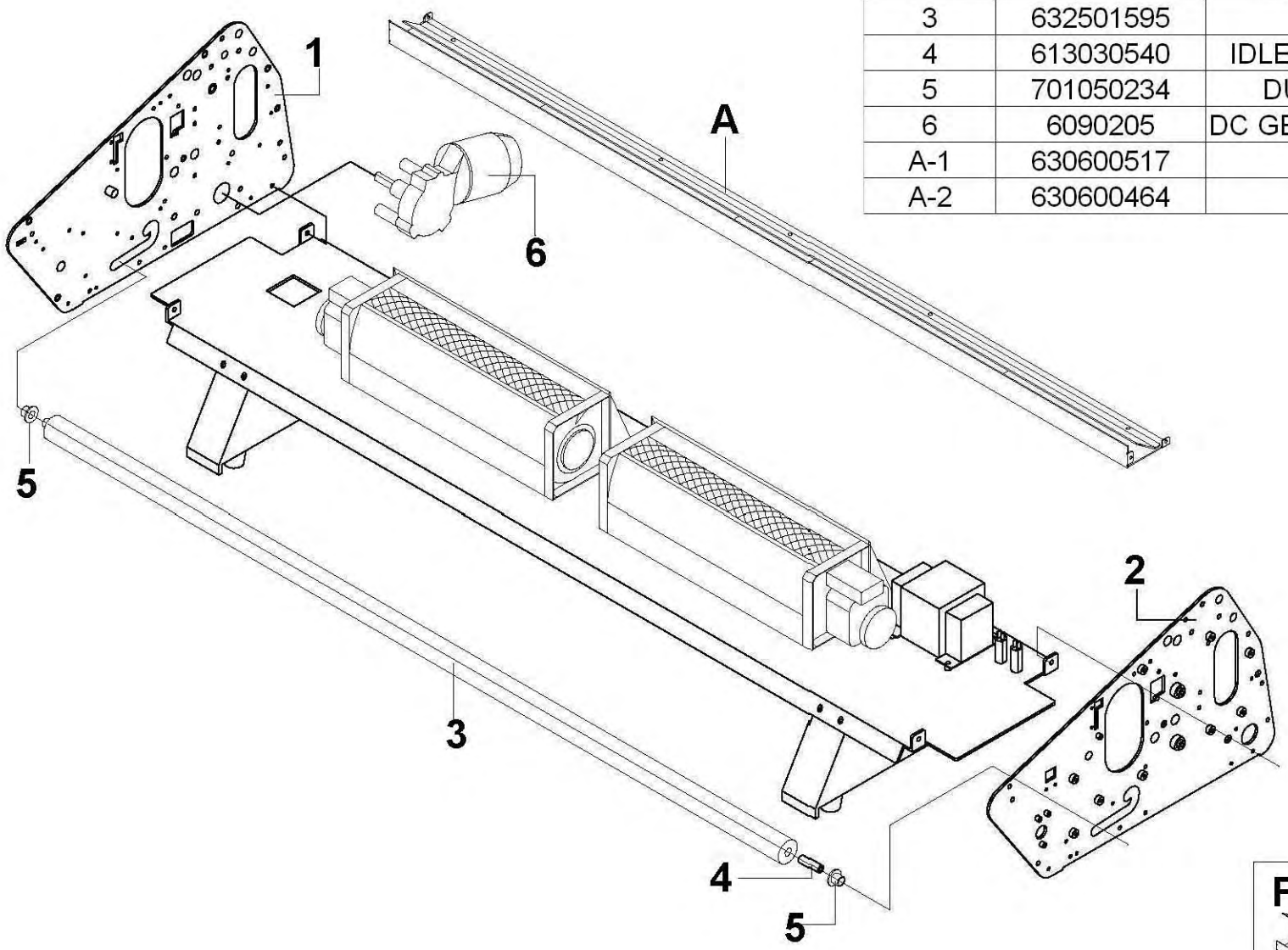

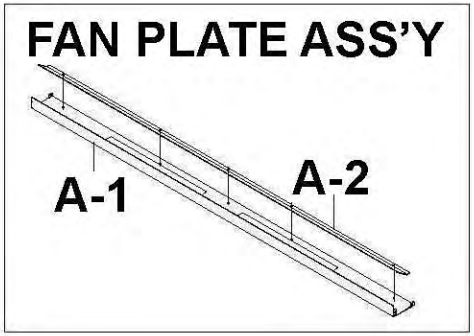

ITEM NO.	PART NUMBER	PART NAME	QTY
1	632501596	ECCENTRIC SHAFT	1
2	613011011	ECCENTRIC CAM	2
3	701020221	DRAWN CUP NEEDLE BEARING	2
4	701090714	SNAP RING	2
5	632501597	IDLE SHAFT	1
6	701090706	SNAP RING	2
7	601250173	ROLLER COVER BLOCK	2
8	601211157	BACK COVER SUPORT	2
A-1	633600683	44DT FRONT COVER	1
A-2	630600465	FILM GUIDE	1

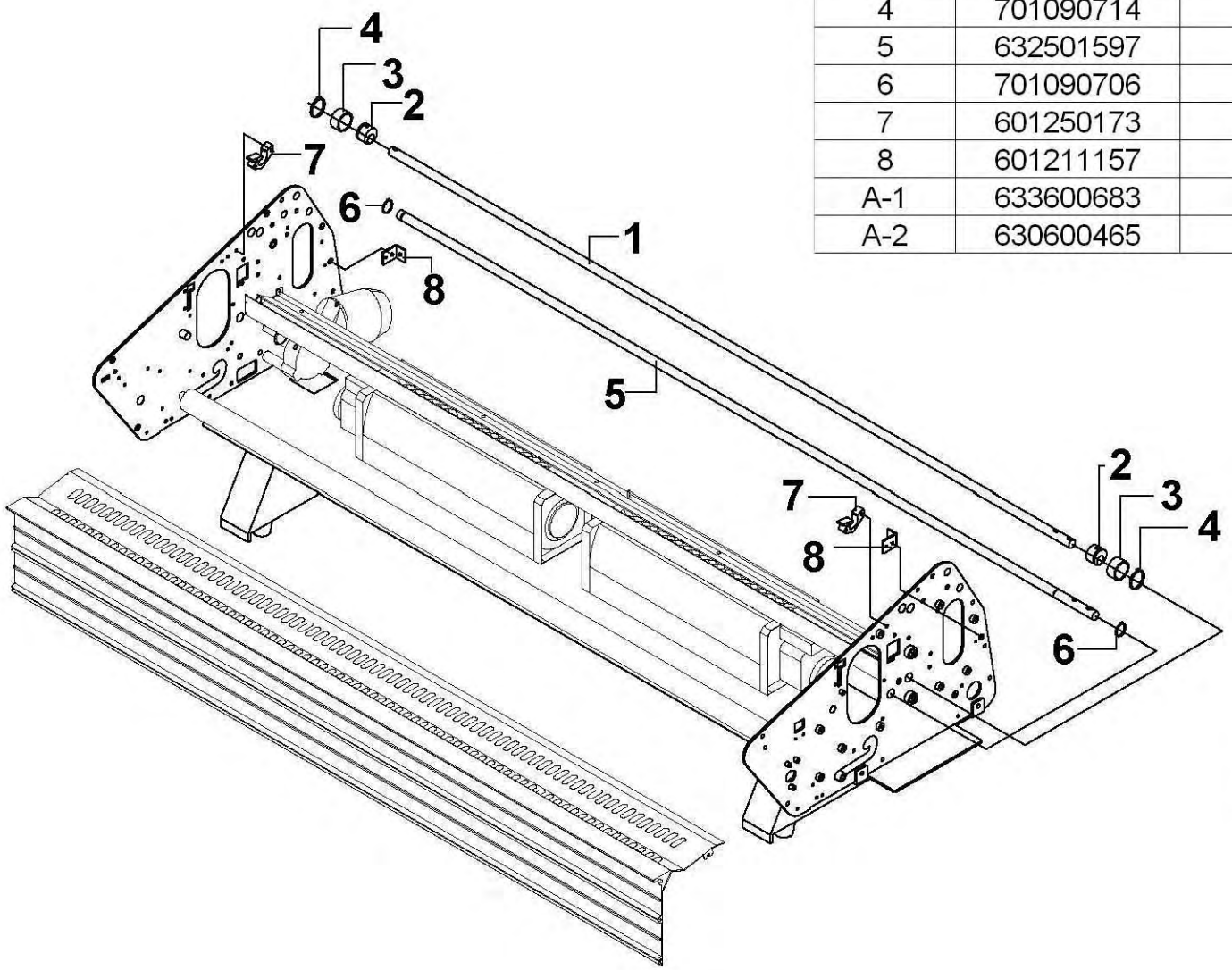

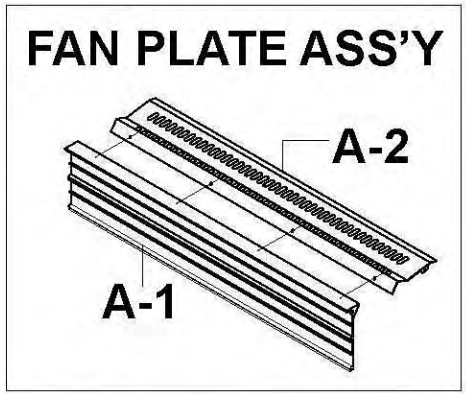

ITEM NO.	PART NUMBER	PART NAME	QTY
1	631800363	44DT HEAT ROLLERS	2
2	632501476	UPPER HEAT ROLL BUSHINGS	2
3	632501826	LOWER HEAT ROLL BUSHINGS	2
4	601250104	HEAT ROLLER SUPPORT	2
5	631800339	PULL ROLLERS	2
6	632501559	PULL ROLL BUSHINGS	4
7	630600523	PULL ROLL SUPPORT (LEFT)	1
8	630600524	PULL ROLL SUPPORT (RIGHT)	1
9	632501594	FRONT TABLE SHAFT	1

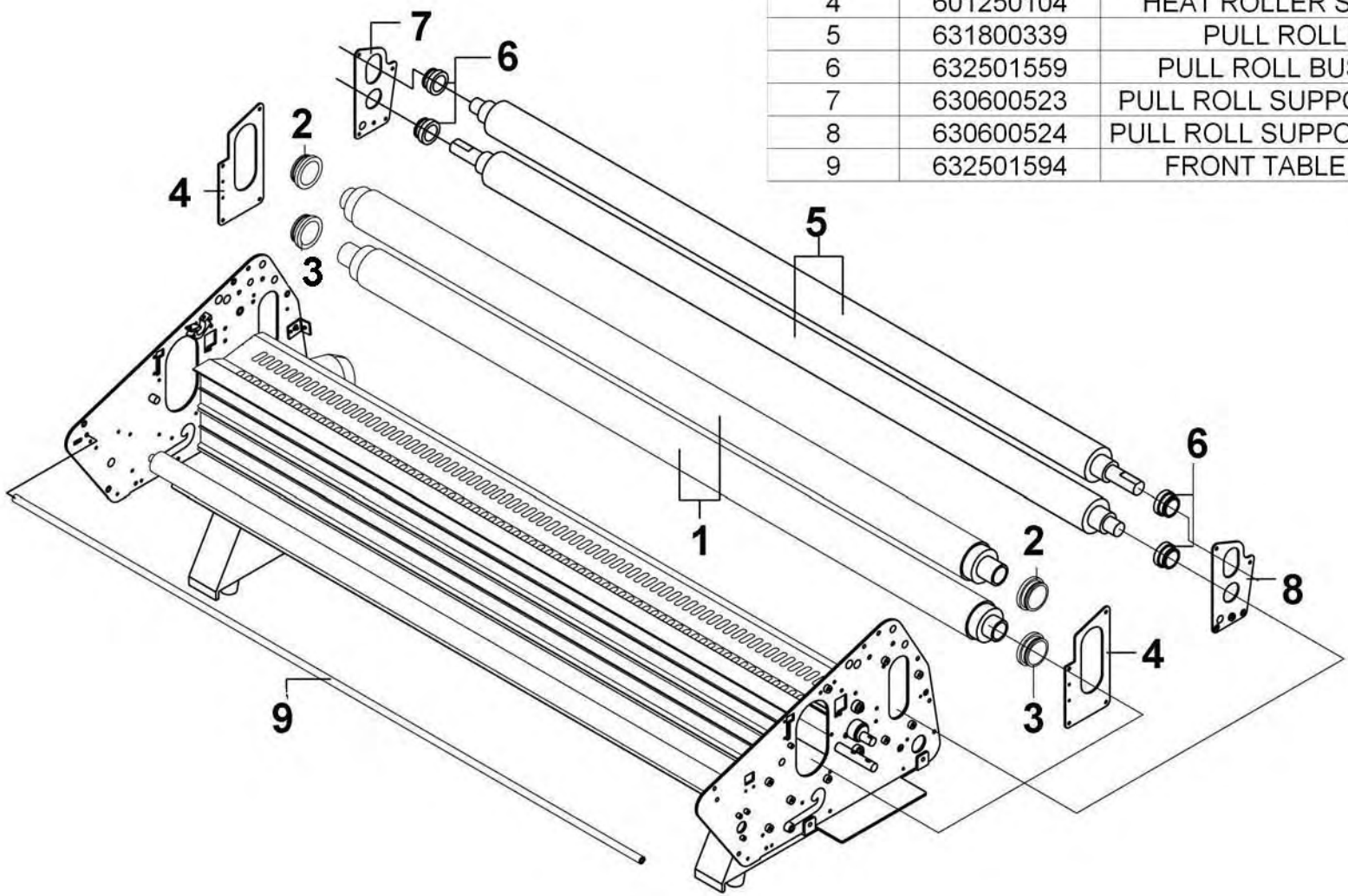

ITEM NO.	PART NUMBER	PART NAME	QTY
1	630600522	EX-P1080 TENSION PLATE(R)	1
2	601230525	EAGLE HOT ROLLER HOOK	1
3	630600469	EX-P1080 P/ROLLER HOOK	1
4	701108113	M/S ROUND HEAD M4.0RH	8
5	701090103	ROLLER SPRING	8
6	701090716	SPRING S RING	4
7	810400205	SPRING S RING	4
8	703010332	HOLDER (EAGLE/ULTIMA)	4
9	635800348	EX-P ECCENTRIC IDLE GEAR	2
10	613011005	ROLL ECCENTRIC LEVER CAP (PL)	1
11	630600428	EX-P HEATER SUPPORT	1
12	630600616	44DT M/S BRACKET(R)	1
13	704090423	MICRO SWITCH (EXCELAM II)	1
14	632501558	EX-P TABLE POSITION BOSS	1
15	630600433	EX-P TABLE POSITION PLATE	1
16	630600613	44DT J-CHANNEL COVER ®	1
17	630600617	44DT POWER PANEL	1
18	CTBBB15	CIRCUIT BREAKER	1
19	704140403	CORD STOPPER	1
20	704031123	POWER CORD	1
21	704090102	POWER SWITCH ROCKER	1

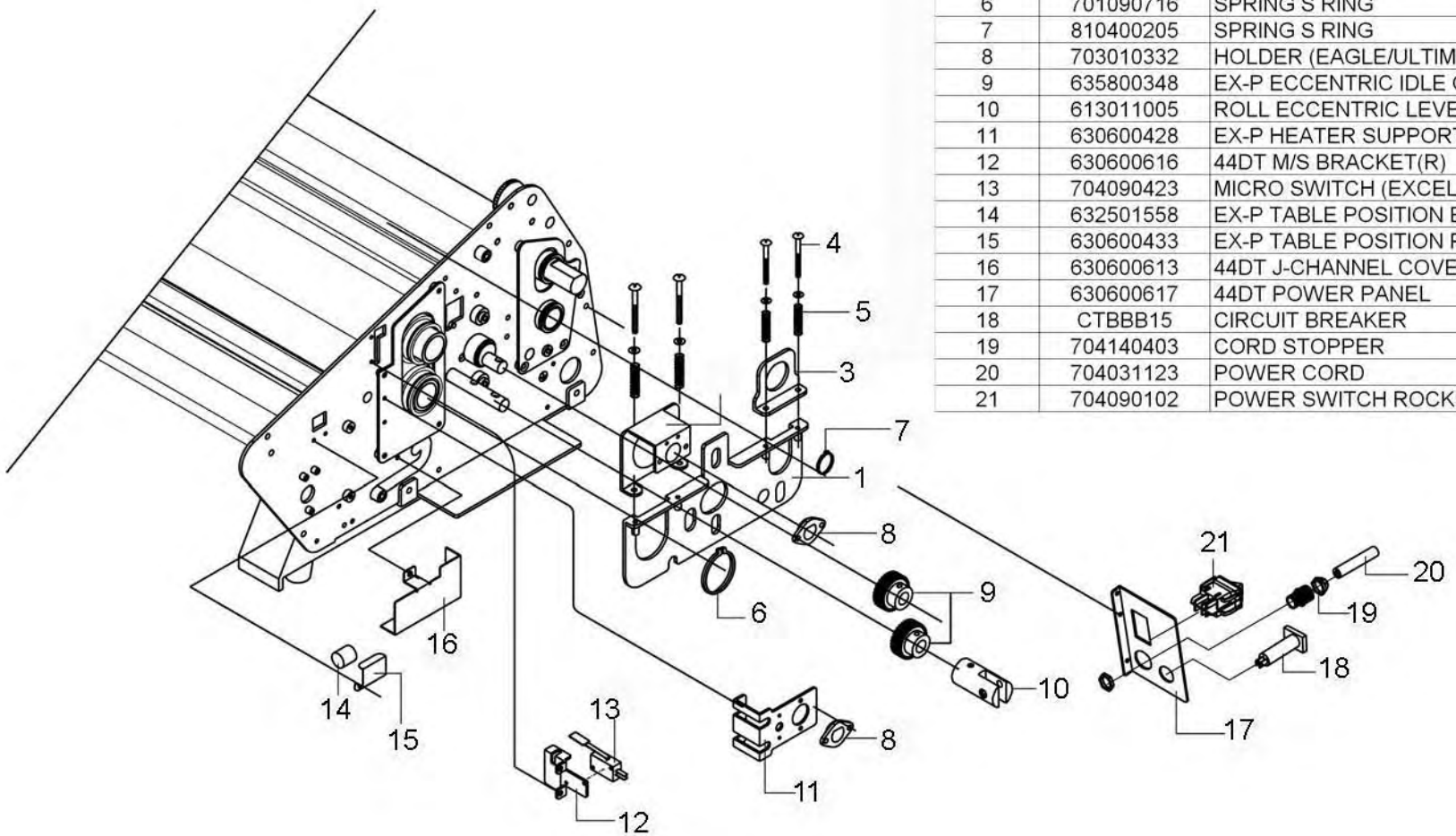

ITEM NO.	PART NUMBER	PART NAME	QTY
1	630600521	EX-P1080 TENSION PLATE(L)	1
2	601230525	EAGLE HOT ROLLER HOOK	1
3	630600469	EX-P1080 P/ROLLER HOOK	1
4	701108113	M/S ROUND HEAD M4.0RH	4
5	701090103	ROLLER SPRING	4
6	701090716	SPRING S RING	2
7	810400205	SPRING S RING	2
8	630600428	EX-P HEATER SUPPORT	1
9	703010332	HOLDER (EAGLE/ULTIMA)	2
10	638200381	EX-P1080 INFRARED HEATER ASS'Y 33OHMS	2
11	630600615	44DT M/S BRACKET(L)	1
12	704090423	MICRO SWITCH (EXCELAM II)	1
13	601310508	MICRO S/W BRACKET	1
14	704090411	MICRO SWITCH (EAGLE)	1
15	630600612	44DT J-CHANNEL COVER(L)	1

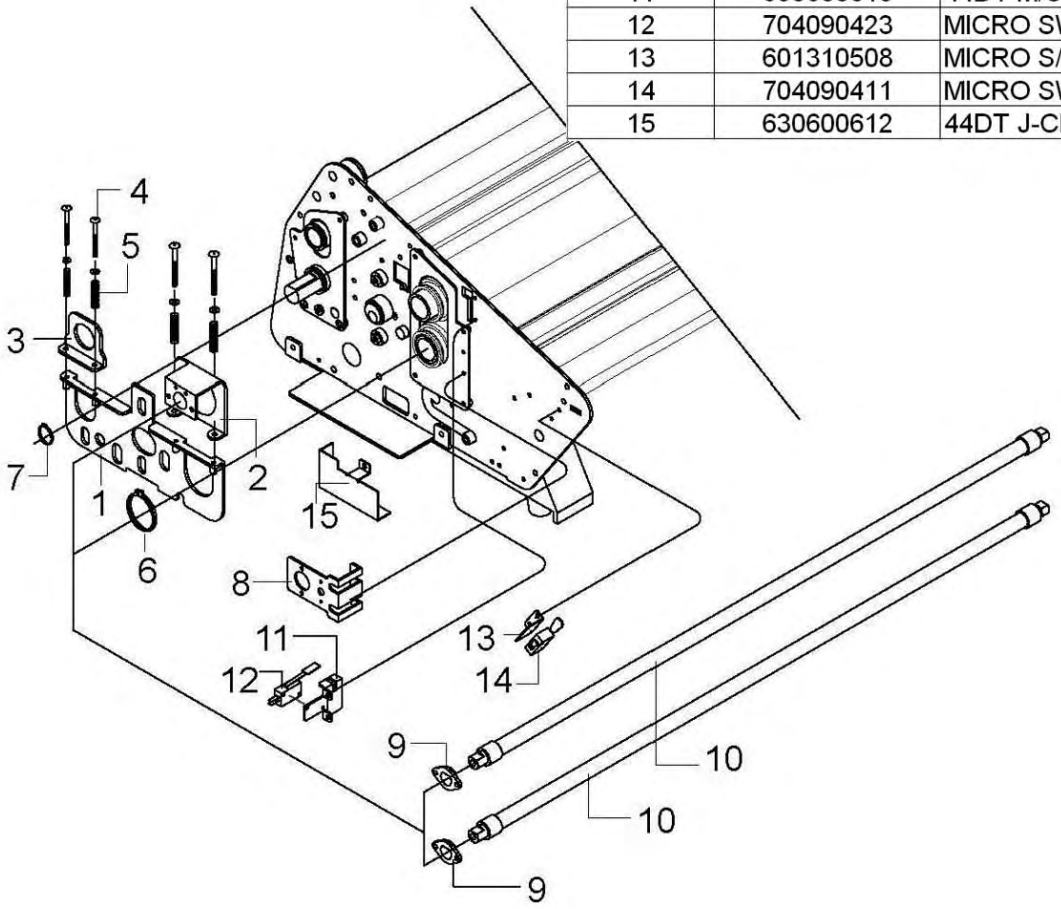

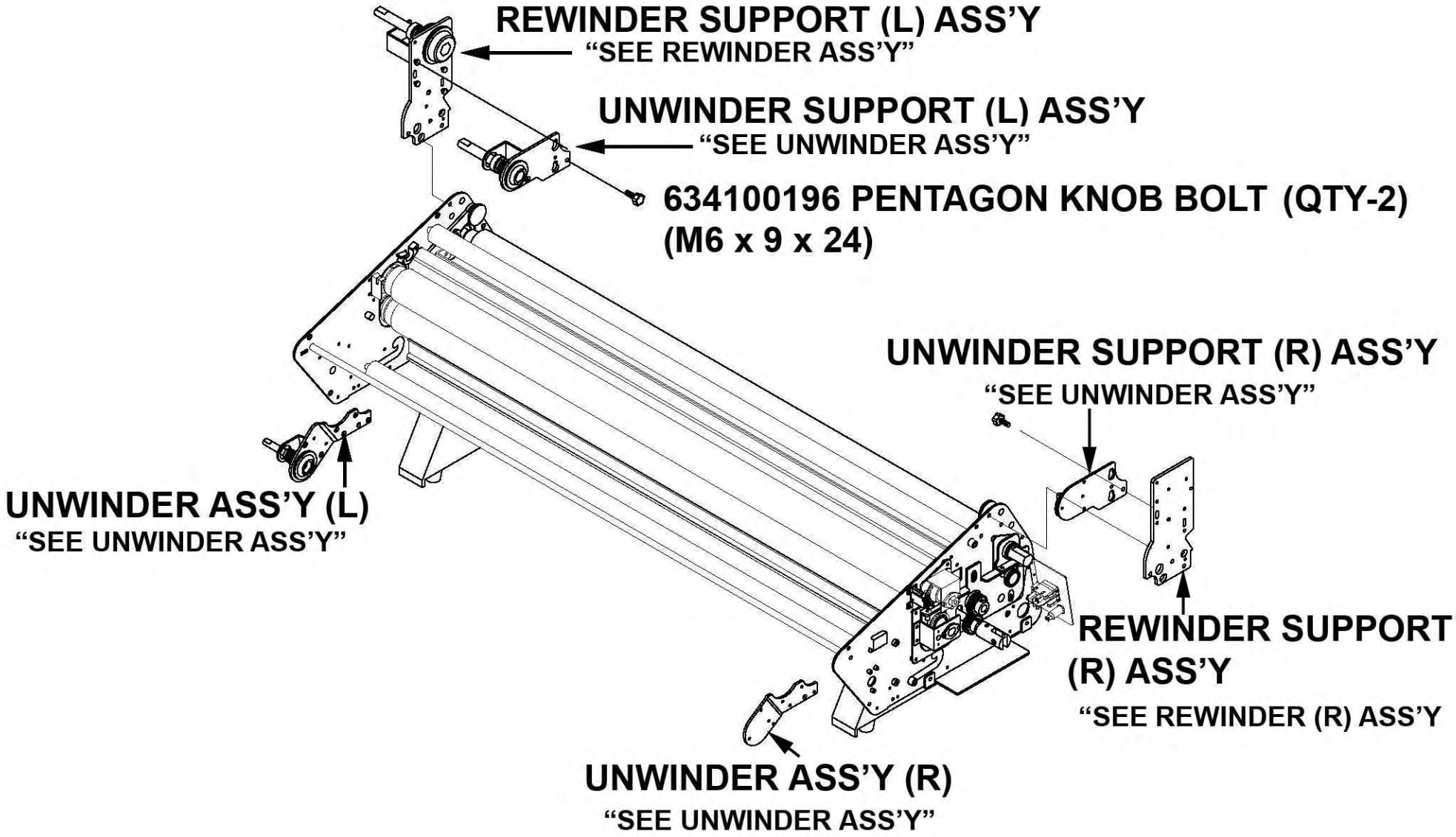
REWINDER SUPPORT (L) ASS'Y
"SEE REWINDER ASS'Y"
UNWINDER SUPPORT (L) ASS'Y
"SEE UNWINDER ASS'Y"
634100196 PENTAGON KNOB BOLT (QTY-2)
(M6 x 9 x 24)
UNWINDER SUPPORT (R) ASS'Y
"SEE UNWINDER ASS'Y"
UNWINDER ASS'Y (L)
"SEE UNWINDER ASS'Y"
REWINDER SUPPORT
(R) ASS'Y
"SEE REWINDER (R) ASS'Y
UNWINDER ASS'Y (R)
"SEE UNWINDER ASS'Y"

ASSEMBLY-9

ITEM NO.	PART NUMBER	PART NAME	QTY
1	635800382	EX-P1080 H/R SPROCKET	1
2	634200032	EXCELAM-PLUS TAKE UP	2
3	701070148	ROLLER CHAIN	1
4	635800381	EX-P1080 MOTOR SPROCKET	1
5	635800383	EX-P1080 P/R DOUBLE SPROCKET	1
6	701070130	ROLLER CHAIN	1
7	632501699	EX-P1080 REWINDER IDLE BOSS	1
8	701050293	DU BUSHING FLANGE	2
9	635800384	EX-P1080 IDLE DOUBLE SPROCKET	1
10	635700153	ROLLER CHAIN RS25H	1
11	701070141	ROLLER CHAIN	1
A-1	630600571	EX-P655 CLUTCH SHAFT SUPPORT	1
A-2	632501776	EX-P CLUTCH SHAFT(ET00H103)	1
A-3	701110702	THRUST NIDDLE WASHER	4
A-4	635400146	THRUST NIDDLE ROLL BEARING	2
A-5	635800345	CLUTCH SPROCKET	2
A-6	701010103	BALL BEARING	2
A-7	634100195	F63 CLUTCH PAD	1
A-8	810400204	DISK SPRING	2

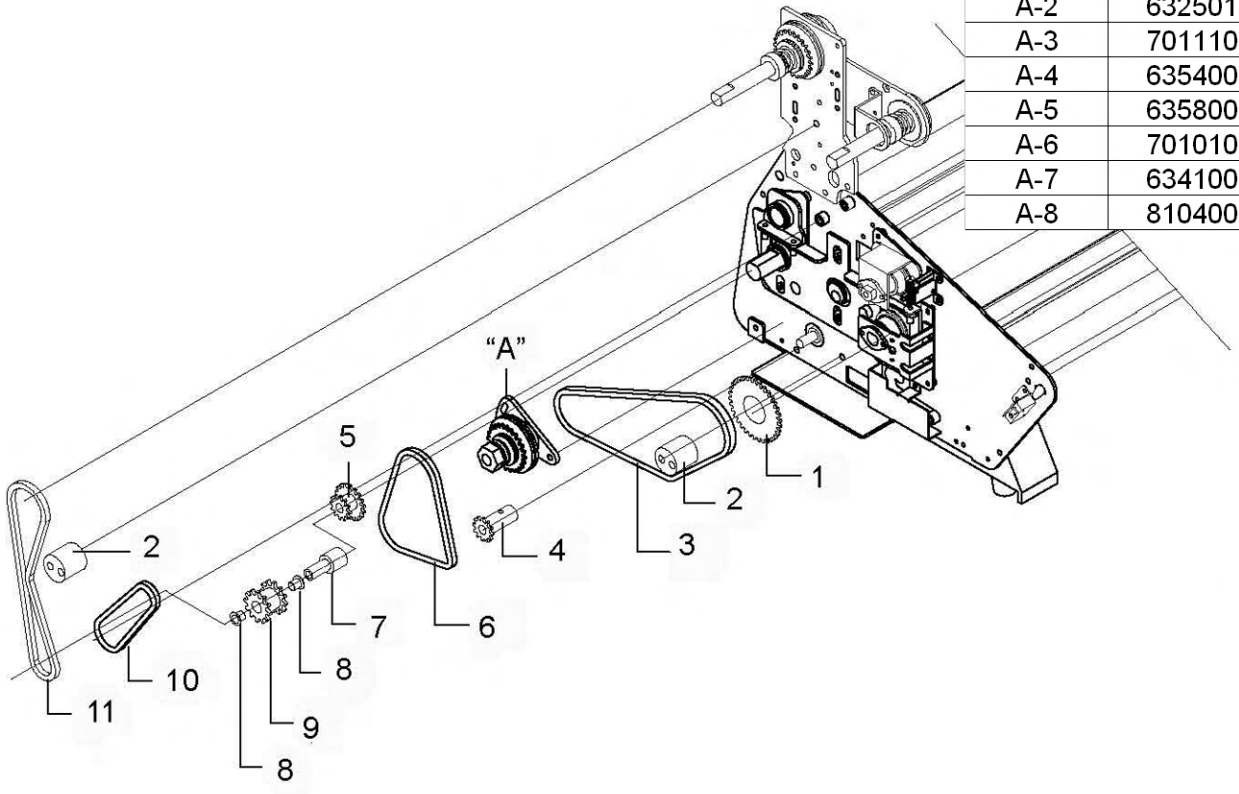

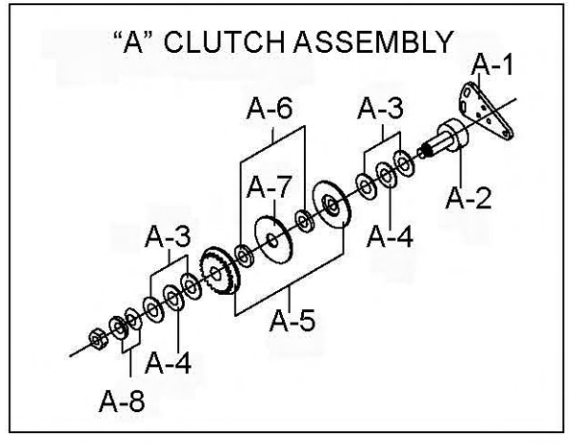

ITEM NO.	PART NUMBER	PART NAME	QTY
1	633600710	44DT FRONT TABLE	1
2	630600444	EX-P655 PCB COVER	1
3	810700285	44DT FUSE STICKER	1
4	638900323	MAIN P.C. BOARD	1
A-1	604022109	TABLE LEVER GUIDE	1
A-2	701090169	LEVER SPRING	1
A-3	601250178	TABLE LEVER	1
A-4	601250179	TABLE LEVER BRACKET	1

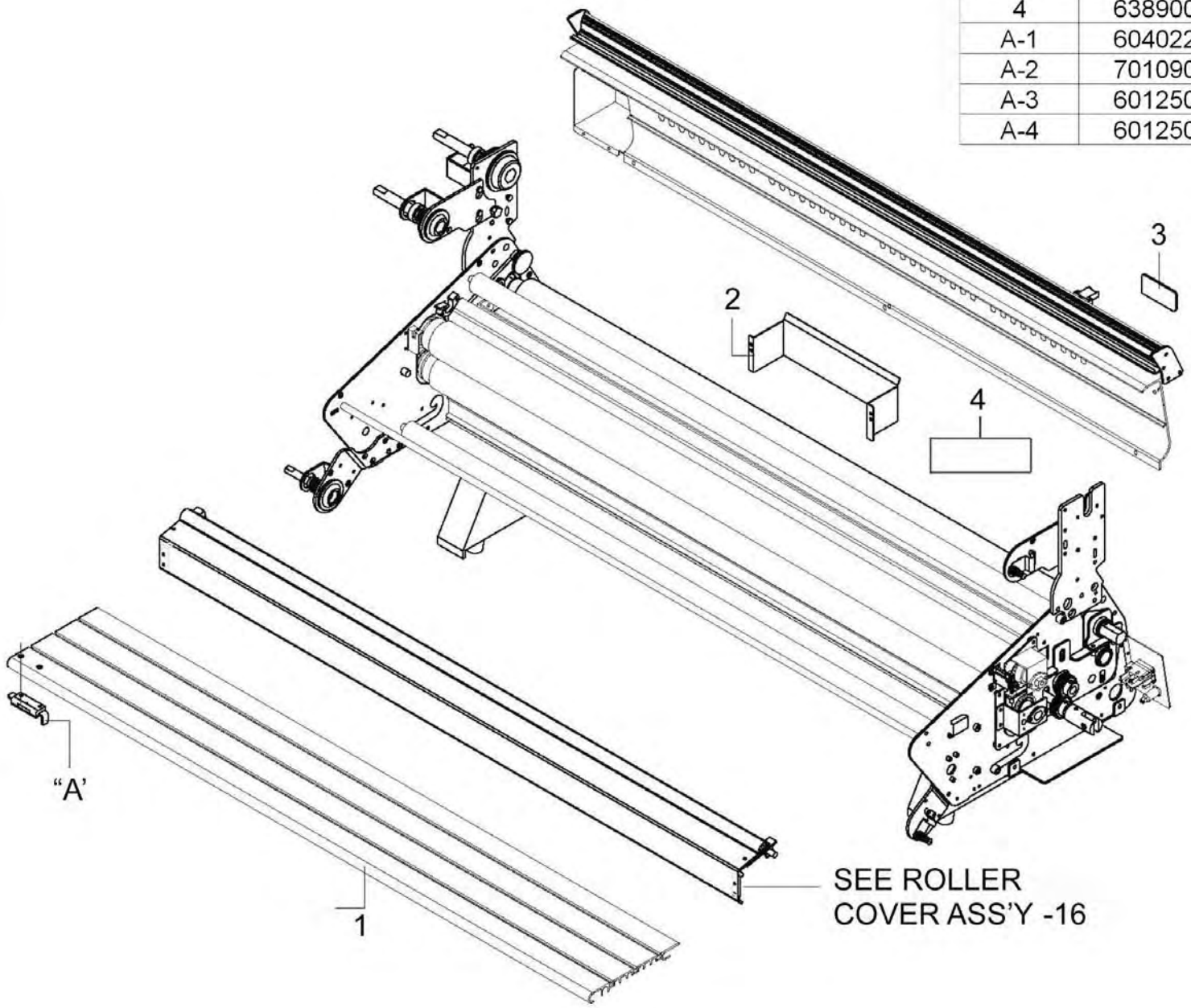

"A" FRONT TABLE
LEVER ASS'Y

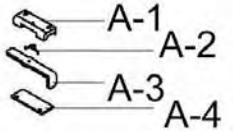

ITEM NO.	PART NUMBER	PART NAME	QTY
1	633000195	44DT SIDE COVER(L)	1
2	810700283	44DT NAME STICKER	1
3	810700287	44DT ELLEIPSE STICKER	1
4	810700281	44DT HOLE COVER STICKER	1
5	633000196	44DT SIDE COVER(R)	1
6	810700284	ROLLER TENSION STICKER	1
7	613010113	ECCENTRIC LEVER	1
8	703021051	ECCENTRIC LEVER HANDLE	1
9	633000194	44DT REWINDER COVER (L)	1
10	810700282	44DT REWINDER COVER STICKER	1
11	633200224	44DT TENSION KNOB	3
12	803040355	COLD TENSION STICKER	3
13	633000192	44DT EXTENSION COVER (L)	2
14	633000198	44DT REWINDER COVER (R)	1
15	633000193	44DT EXTENSION COVER (R)	2
A-1	633000197	44DT CONTROL PANEL	1
A-2	810700286	44DT S/W PANEL STICKER	1
A-3	637400164	RUBBER KEY SWITCH	1
A-4	638900324	DISPLAY P.C. BOARD	1

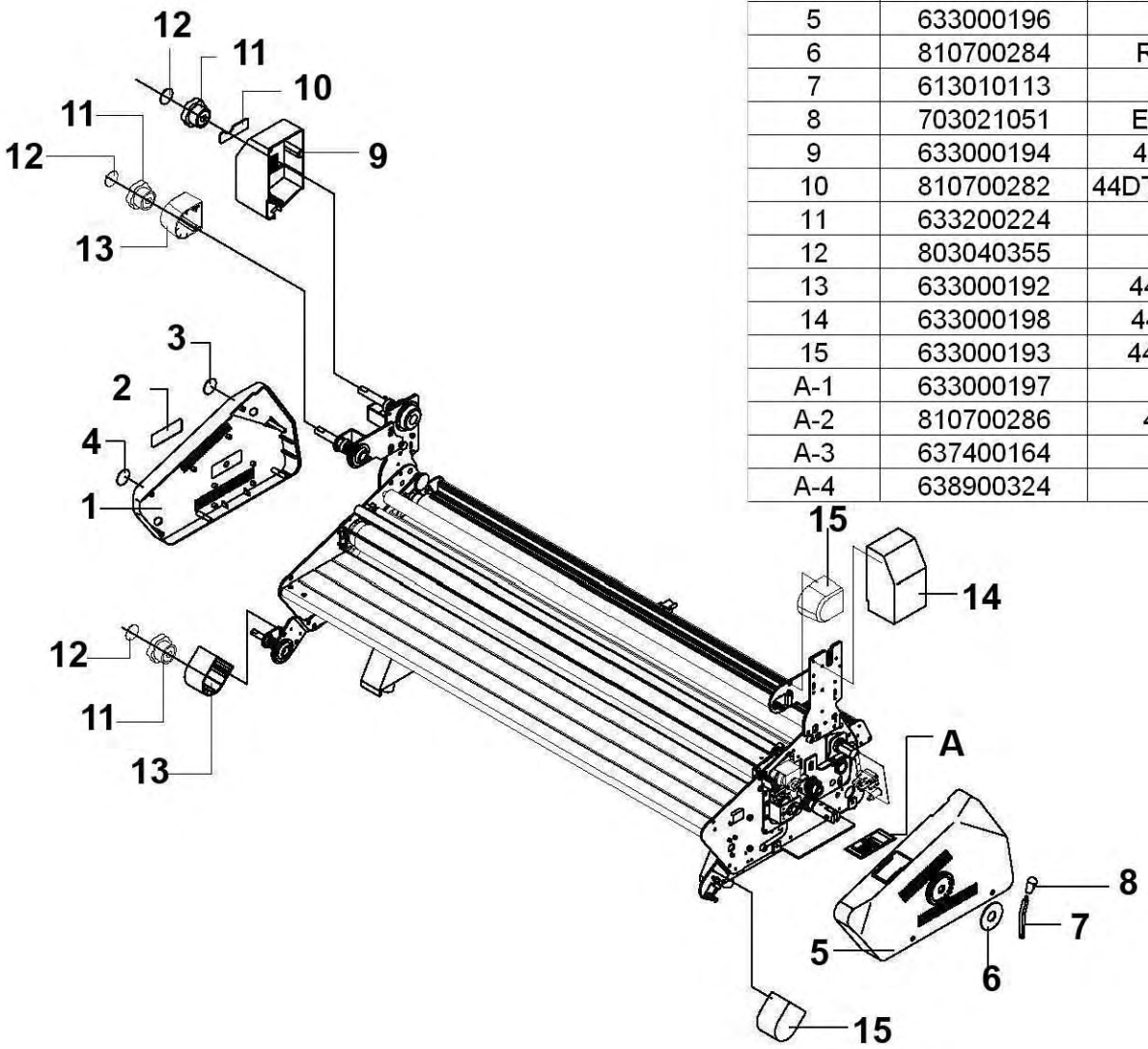

"A" Display Assembly

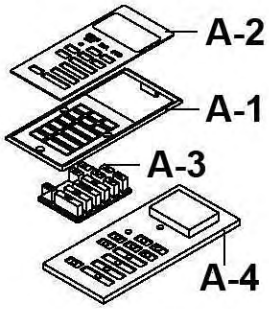

ITEM NO.	PART NUMBER	PART NAME	QTY
1	804020404	CARDBOARD TUBE	1
2	8050112	CORE CHUCK 57MM	2
A-1	604037033	3" BLACK CORE CHUCK ASS'Y (INCLUDES A-2)	4
A-2	601211111	3" CORE BUSH STOPPER PIN	4
B-1	632501849	44DT HEX FILM SHAFT	3
B-2	613030301	FILM SHAFT BUSHING	3
B-3	701090606	SNAP RING	3

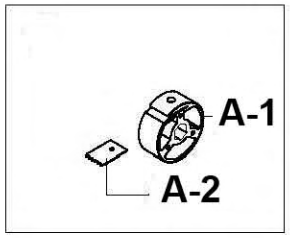

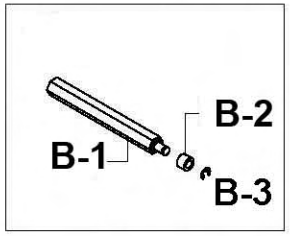

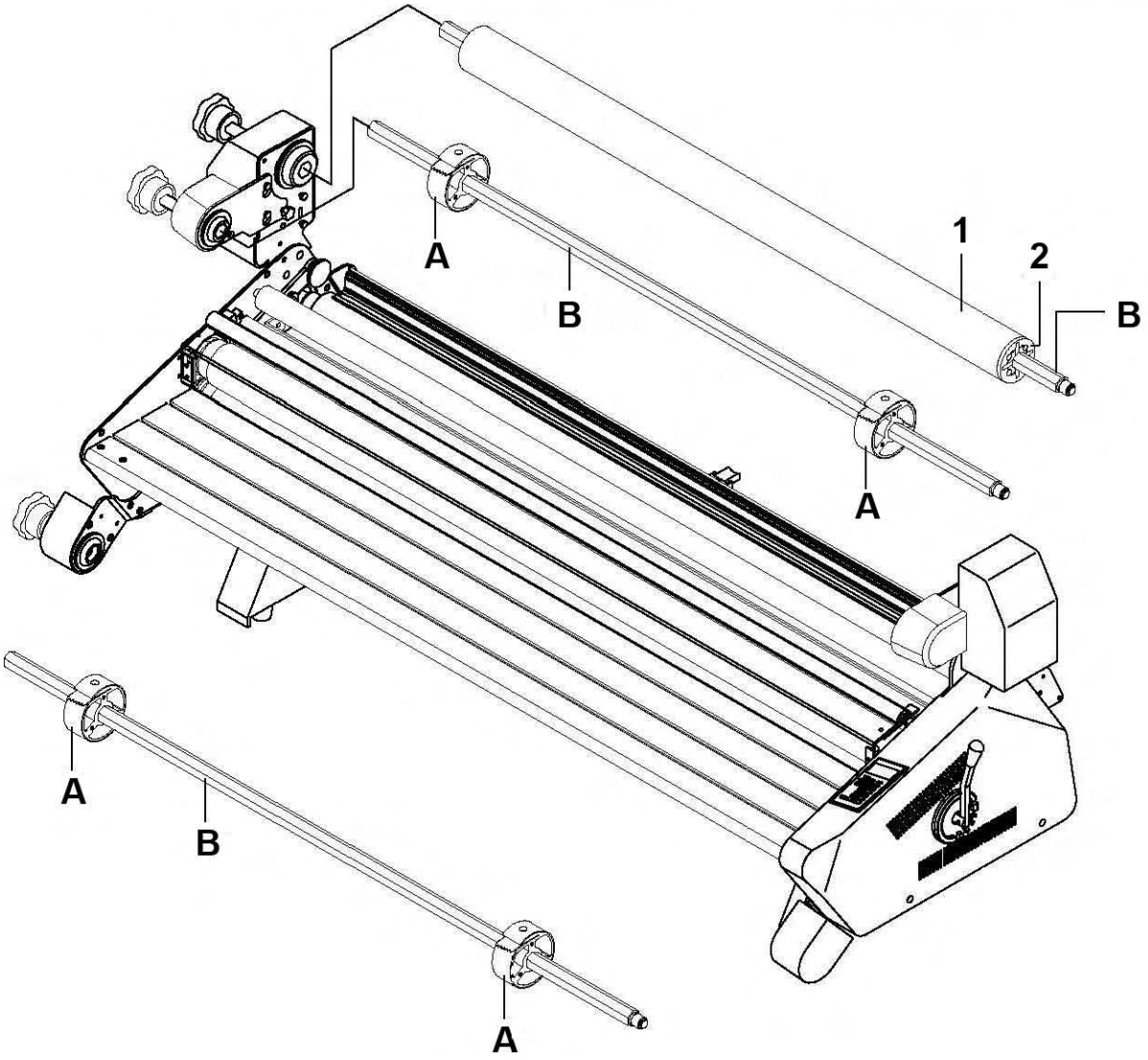

ITEM NO.	PART NUMBER	PART NAME	QTY
1	630600510	44DT REWINDER SUPPORT (LEFT)	1
2	701050183	DU BUSHING TUBE	1
3	632501559	REWINDER TENSION BOLT	1
4	601230711	OUTER TENSION DISK	1
5	703070112	INSIDE TENSION DISK	1
6	703070114	CLUTCH SKIN PAD	1
7	701090141	FILM PIPE SPRING	1
8	632501703	TENSION BLOCK	1
9	630600516	REWINDER TENSION BLOCK STOPPER	1
10	630600511	44DT REWINDER SUPPORT (RIGHT)	1
11	630200130	FILM SUPPORT	1
A-1	635400156	THRUST NEEDLE ROLL BEARING	3
A-2	701110703	THRUST NEEDLE WASHER	6
B-1	635800380	REWINDER CLUTCH SPROCKET	1
B-2	701050143	DU BUSHING TUBE	1

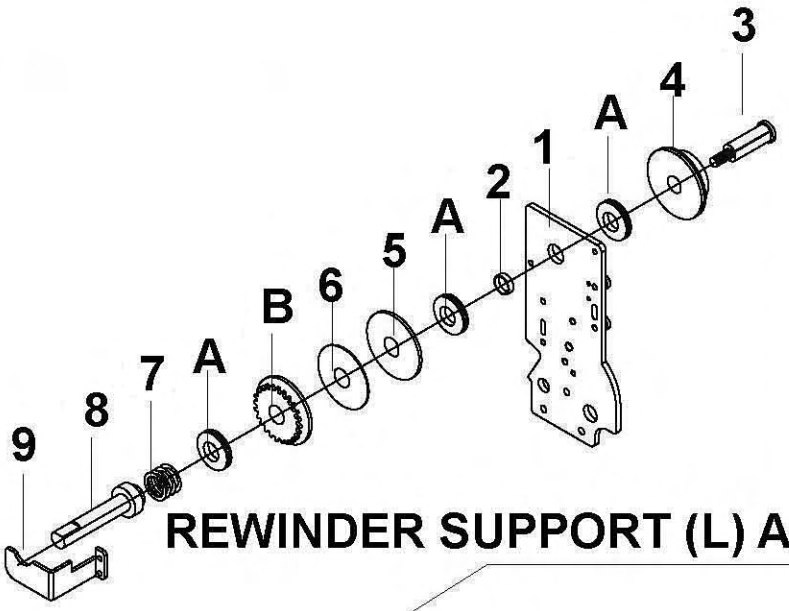

REWINDER SUPPORT (L) ASS'Y

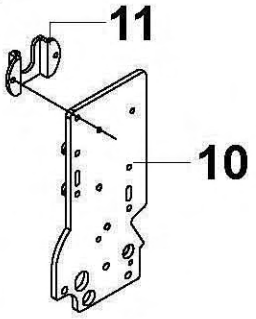

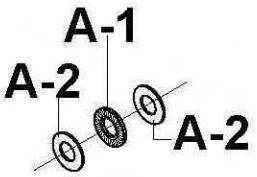

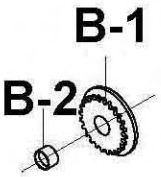

REWINDER SUPPORT (R) ASS'Y

ITEM NO.	PART NUMBER	PART NAME	QTY
1	630600435	44DT UNWINDER SUPPORT (LEFT)	1
2	630600087	OUTSIDE TENSION PLATE	1
3	634100194	CLUTCH PAD	2
4	703070101	CLUTCH SKIN PAD	2
5	601230702	INSODE TENSION PLATE	1
6	701090141	FILM PIPE SPRING	1
7	632501702	TENSION BLOCK	1
8	601230708	TENSION BLOCK STOPPER	1
9	630600514	44DT UNWINDER SUPPORT (RIGHT)	1
10	630200130	FILM SUPPORT	1
A-1	613030537	FILM TENSION BOLT	1
A-2	701090832	SPRING ROLL PIN	1

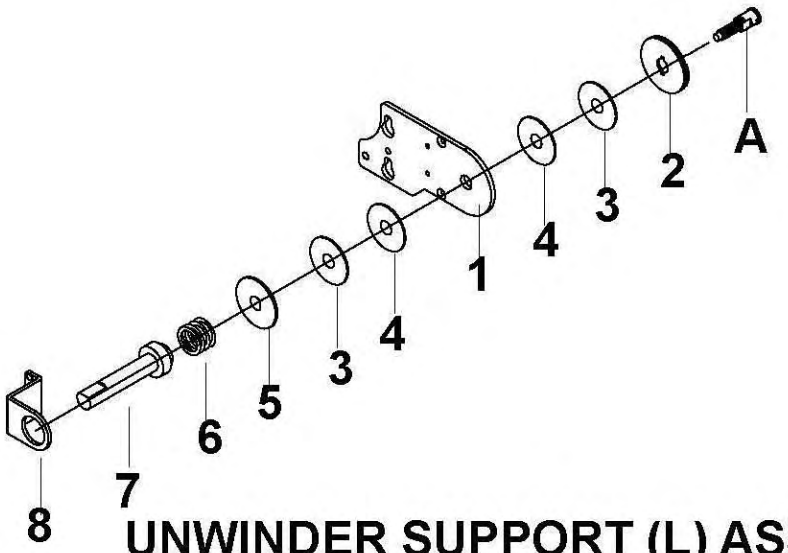

UNWINDER SUPPORT (L) ASS'Y

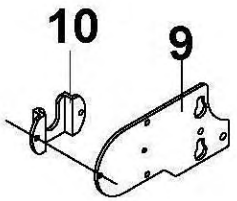

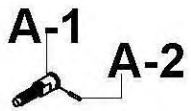

UNWINDER SUPORT (R) ASS'Y

ITEM NO.	PART NUMBER	PART NAME	QTY
1	630600610	44DT EXTENSION PLATE (LEFT)	1
2	601250114	OUTSIDE TENSION PLATE	1
3	703070101	CLUTCH SKIN PAD	2
4	634100194	CLUTCH PAD	2
5	601230702	INSIDE TENSION DISK	1
6	701090141	FILM PIPE SPRING	1
7	632501702	TENSION BLOCK	1
8	601230708	TENSION BLOCK STOPPER	1
9	630600611	44DT EXTENSION PLATE (RIGHT)	1
10	630200129	FILM SUPPORT	1
A-1	613030537	FILM TENSION BOLT	1
A-2	701090832	SPRING ROLL PIN	1

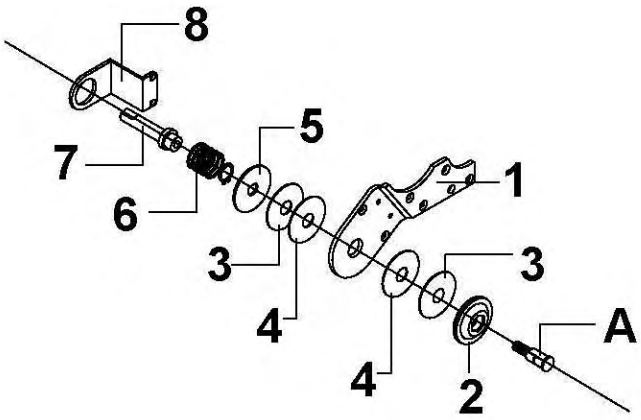

FILM SUPPORT ASS'Y (L)

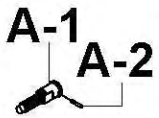

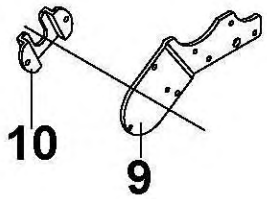

FILM SUPPORT ASS'Y (R)

EXTENSION UNWINDER

ITEM NO.	PART NUMBER	PART NAME	QTY
1	630600474	ROLLER COVER	1
2	633600636	ROLLER COVER CAP	2
3	630600164	ROLLER COVER BRACKET (FRONT)	2
4	601250174	ROLLER COVER SUPPORT (LEFT)	1
5	601250175	ROLLER COVER SUPPORT (RIGHT)	1
6	633600653	REAR COVER	1
7	633600634	BLADE RAIL	1
8	706111121	BACK TRIMMER ASS'Y	1
9	630600434	BLADE RAIL BRACKET	2
10	633000187	MOTOR COVER	1

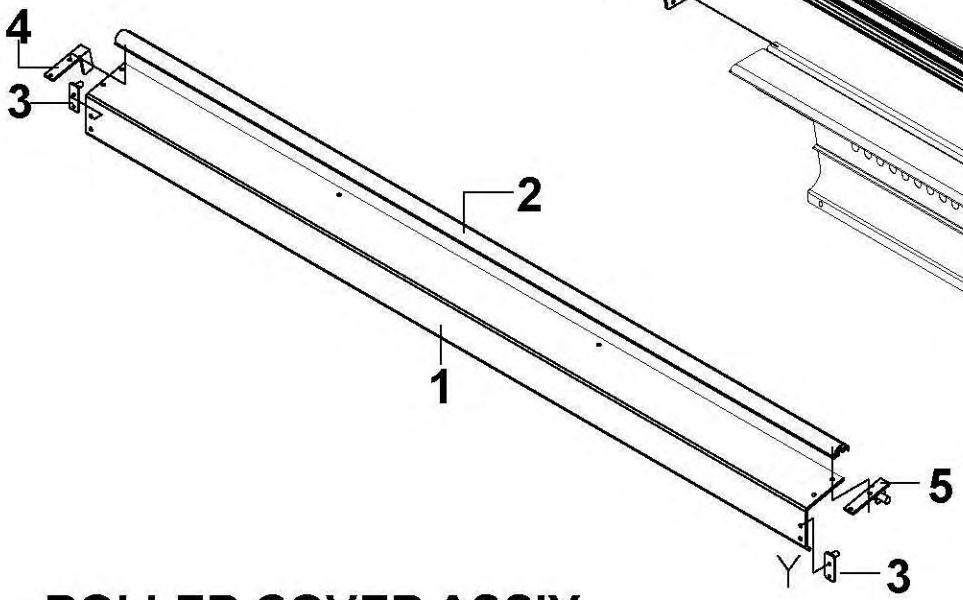

ROLLER COVER ASS'Y

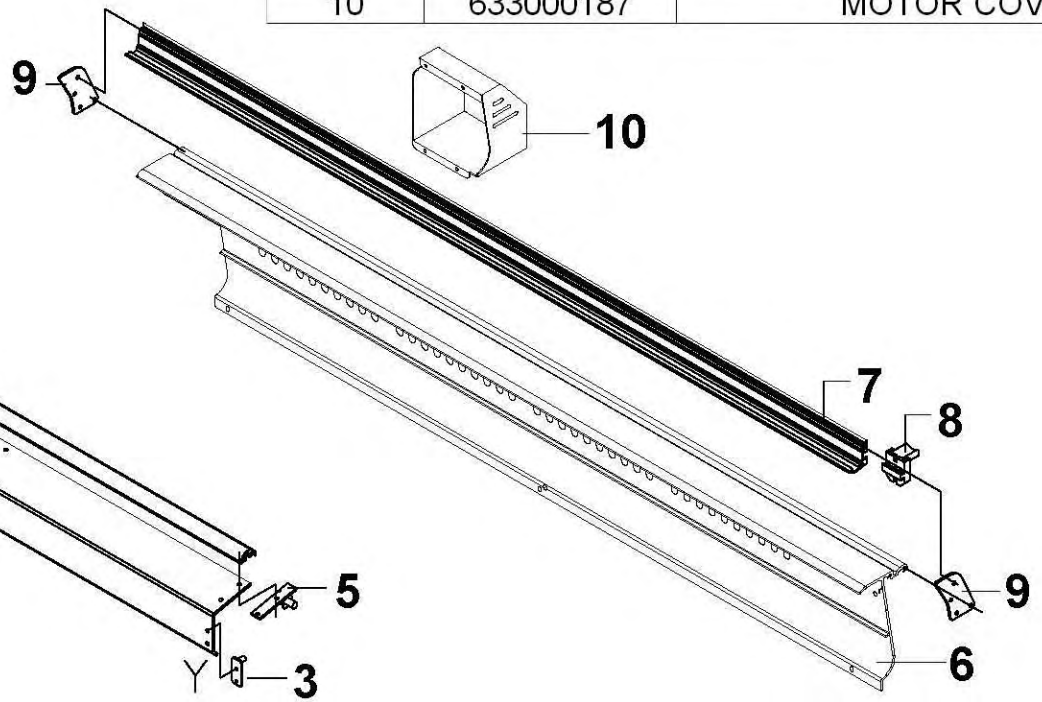

REAR COVER ASS'Y